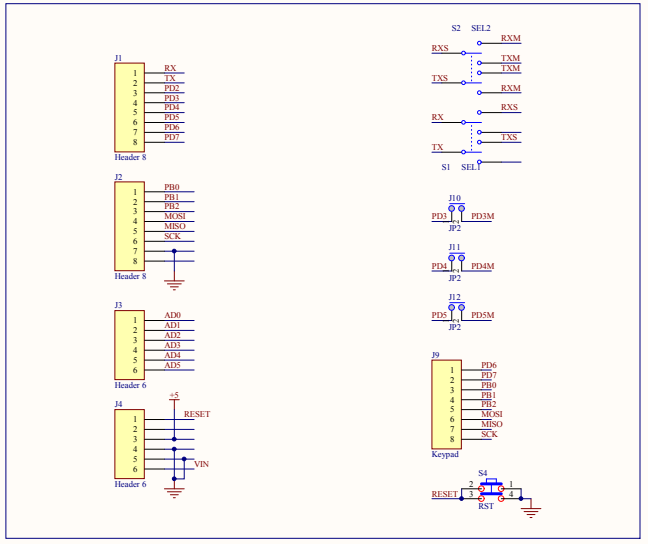

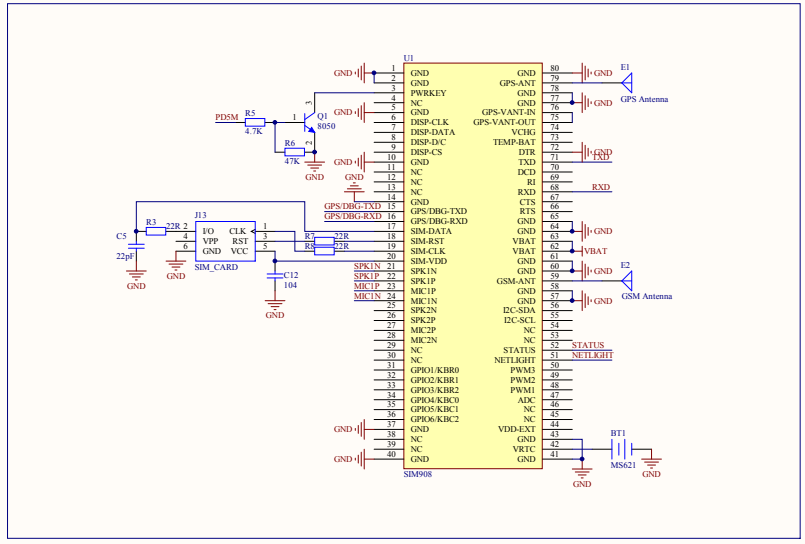

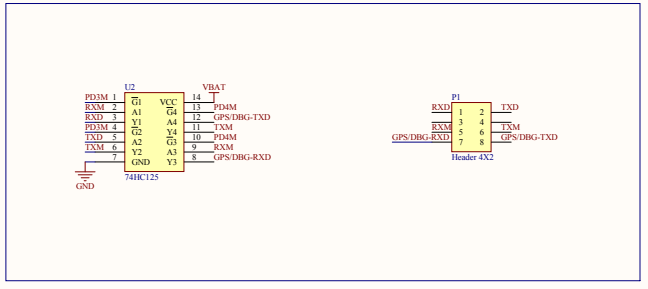

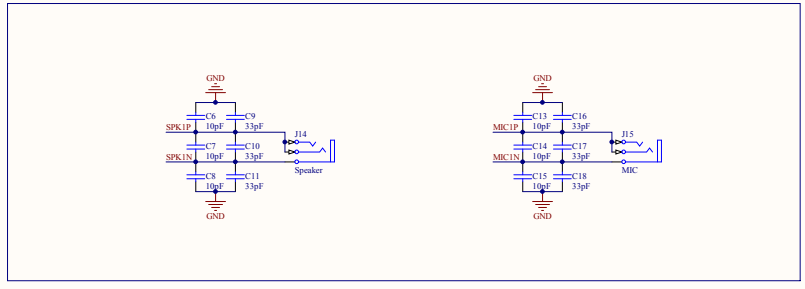

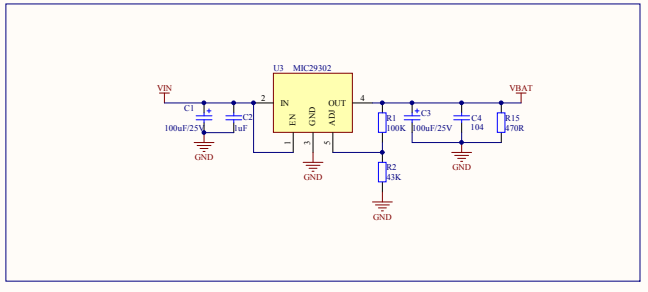

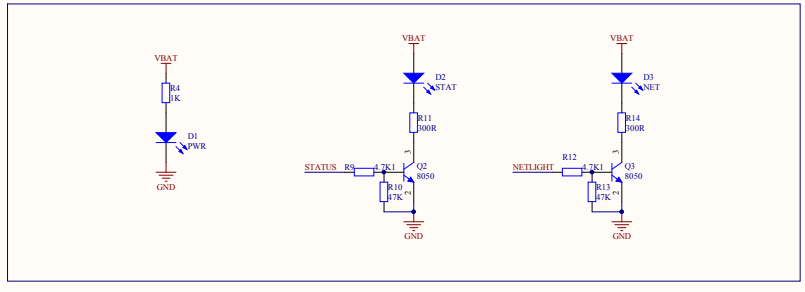

Title		
Size C	Number	Revision
Date: 2013/3/28	Sheet of	
File: F:\20-Files send to me\..\GSM+GPRS+GPS Module.Doc		